PNEUMATIC ROTARY ACTUATORS FOR VALVE AUTOMATION HANDBOOK

Second Edition

Easytork Automation Corporation

Easytork Automation Corporation

Easytork Automation Corporation

2505 Metro Blvd, Suite A

Maryland Heights, Missouri 63043, U.S.A.

February 2022

Preface

Even though there is a variety of rotary valves to choose from, the primary purpose can be categorized as either to stop or start flow (isolation valve) or to throttle flow (throttling control valve). This handbook deals principally with pneumatic actuation for rotary style isolation valves.

Table of Contents

Chapter 1: Introduction to Pneumatic Rotary Actuators

1.1 What are Pneumatic Rotary Actuator?

Actuators are mechanisms that convert an energy source into mechanical motion. Typical energy source are pneumatic pressure, electric, or hydraulic. The amount of pneumatic pressure is quantified as pound-force per square inch ("PSI") with imperial unit, or "BAR" under metric units. Pneumatic actuator, as its name entails, uses pneumatic pressure as its source of energy. Determining which of the energy sources to use (pneumatic, electric, or hydraulic) is largely determined by what energy source is already available at a process facility.

Rotary motion and linear motion are the subset of motion that a pneumatic actuator can be designed for. Pneumatic rotary actuators are typically designed to operate between 0° to 90°, also known as quarter-turn actuators. The amount of rotational force is known as torque, and is quantified as inch-pound ("in-lb") or foot-pound ("ft-lb") with imperial unit, and Newton-meter ("NM") with metric unit.

1.2 Styles of Pneumatic Rotary Actuator

How actuators convert pneumatic pressure into rotary motion falls into two broad design principles: rotary-to-rotary and linear-to-rotary. Understanding each design principle explains how efficiently the design converts pneumatic pressure into torque.

1.2.1 Rotary-to-Rotary

If the actuator's inherent movement and the output movement are both rotary, the actuator is classified as rotary-to-rotary design.

1.2.1.1 Vane Style Actuator

Vane type pneumatic actuators (figure 1.1, as viewed from the top) are the only design style that take advantage of the rotary-to-rotary design principle. The "vane" is the only moving part in the actuator, and rotates within the "vane chamber". The edge of the vane is in full contact with the vane chamber to prevent pressure blow by, as a result the full surface of the vane catches and converts pneumatic pressure into torque.

(Figure 1.1)

Figure 1.2 is a side view of a vane, double-acting torque calculation of vane actuators can be expressed as:

Applied force (pneumatic pressure)
x
effective leverage distance ("X")
x
effective surface area ("Area B and C")

Area A does not generate any force, the positive area (A+) is negated by the negative area (A-).

Area B and C have the same surface area, the effective leverage distance (X) is the distance from the pivot point to where area B and C are divided.

(Figure 1.2)

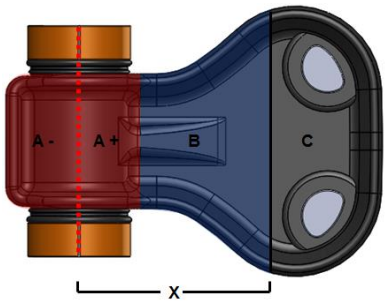

Double-acting vane actuators generate the same amount of torque at various points of the actuator's

rotation, refer to figure 1.3. As long as the applied force (pneumatic pressure) is constant, effective leverage distance ("X") and effective surface area ("Area B and C") are also constant.

(Figure 1.3)

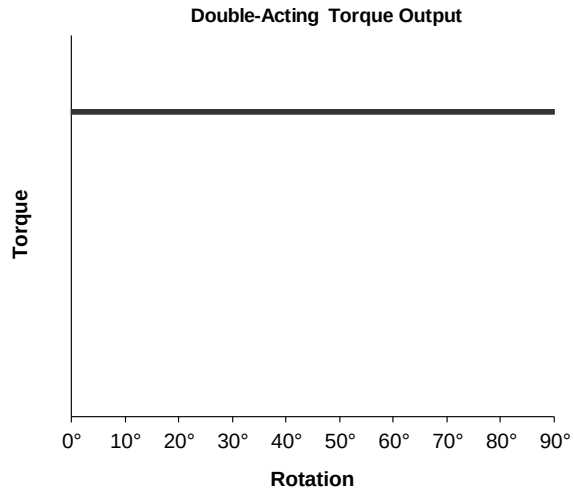

1.2.2 Linear-to-Rotary

If the actuator's inherent movement is linear and the output movement is rotary, the actuator is classified as linear-to-rotary design. The linear piston movements are converted to rotatory motion through gears. The two families of linear-to-rotary actuators are defined by the type of gear design.

1.2.2.1 Rack & Pinion Style Actuator

Rack & pinion actuators convert linear moving pistons to a rotary motion through rack & pinion gears. Figure 1.4 shows the rack & pinion actuator from the top view. O-rings are typically installed on the edges of pistons to prevent pneumatic pressure blow by. As pneumatic pressure builds up against the piston, the piston moves in a linear motion that is converted to rotary motion through the gears.

Torque calculation of double-acting rack & pinion actuators can be expressed as:

Piston force (Applied force (pneumatic pressure) x piston surface area ("B")) x effective leverage distance ("X")

Double-acting rack & pinion actuators generate the same amount of torque at various points of the actuator's rotation, similar to figure 1.3. As long as the applied force (pneumatic pressure) is constant, effective leverage distance ("X") and piston force will remain constant.

(Figure 1.4)

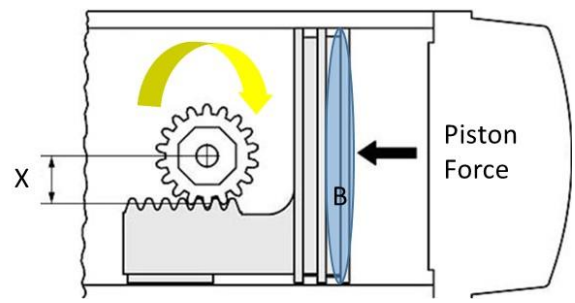

1.2.2.2 Scotch Yoke Style Actuator

Similar to rack & pinion actuators, scotch yoke actuators convert linear moving piston to rotary motion through scotch yoke gears. Figure 1.5 shows the scotch yoke actuator from the top view. O-rings are typically installed on the edges of pistons to prevent pneumatic pressure blow by. As pneumatic pressure builds up against the piston, the piston moves in a linear motion to be converted to rotary motion through the gears.

Torque calculation of double-acting scotch yoke actuators can be expressed as:

Piston force (Applied force (pneumatic pressure) x piston surface area ("B")) x effective leverage distance ("X")

(Figure 1.5)

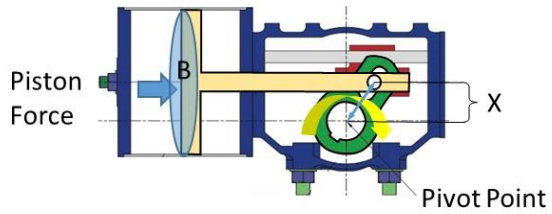

In the case of scotch yoke designs, the effective leverage distance "X" is longest at the extreme end of the rotational movement (0° and 90°), and the shortest at mid rotation (45°) as seen in figure 1.6.

Unlike double-acting vane or rack & pinion actuators, scotch yokes do not generate the same amount of torque at various points of the actuator's rotation, refer to figure 1.7. Even if the applied force (pneumatic pressure) is constant, effective leverage distance ("X") is not constant.

(Figure 1.6)

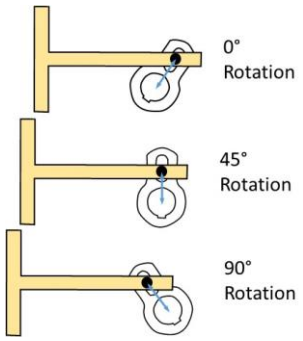

(Figure 1.7)

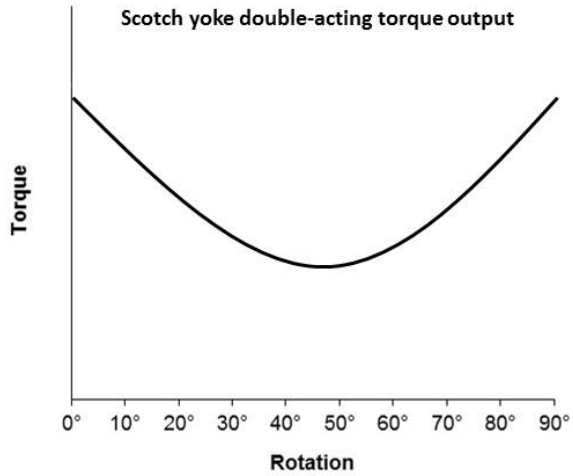

1.3 Summary

Refer to figure 1.8 for a summary of the various pneumatic rotary actuator design. Understanding the basics of the various designs help equip the engineer to solve the issue on hand.

(Figure 1.8)

Rotary Pneumatic Actuator

	Vane	Rack & Pinion	Scotch Yoke
Style	Rotary-to-Rotary	Linear-to-Rotary	Linear-to-Rotary
Moving Parts	One	Many	Many
Effective Leverage Distance	Long	Short	Varied
Double-Acting Torque Curve	Linear	Linear	Non-Linear

***Style and Moving Parts Implications*:**

Generally speaking, vane actuators require less maintenance and are better suited for high cycle applications over rack & pinions and scotch yoke actuators because there is only one part that could potentially break down. Rotary-to-linear actuators, at the very minimum, have at least one moving piston, and a gear system to transfer linear motion into rotary motion.

Video: Deconstructing actuators

***Effective Leverage Distance Implications*:**

The effective leverage distance affects the size, weight, air consumption, and stroke speed required by actuators. Given equal constraint on energy source (pneumatic pressure), the longer the effective leverage distance, the more exponentially effective the actuator generates torque. Vane actuators have by far the longest leverage distance, followed by scotch yoke when it is at its extreme end of its rotational movement (0° and 90°), and lastly rack & pinions. The practical implications of an actuator with a long leverage distance is the reduction of necessary size, weight, air consumption, and stroke speed (useful for fast-acting applications) for the same torque output.

Case Study: Skid Manufacturing, Compact Size and Weight Requirements

Market Discussion: Challenges associated with valve actuation on trucks

***Double-Acting Torque Curve Implications*:**

Typical application of rotary pneumatic actuators are used to affect the movement of rotary valves. As long as the actuator produces more torque than what the valve requires for movement (along with safety factor) it would typically satisfy the application. Different valve designs have different torque curve, some have relatively linear torque requirements, and others have a U-shaped torque curve, requiring the most at the full open and full close position.

Chapter 2: Functions of Pneumatic Actuators

2.1 Functions of Pneumatic Actuators

Actuators are specified as either double-acting or fail-safe. The consideration for specifying either double-acting or fail-safe is based on how the actuator reacts when the primary energy source to the actuator (i.e. pneumatic pressure) is lost.

2.1.1 Double-Acting

Double-acting actuators do not have a secondary source of energy. Both counter-clockwise (0° to 90° rotation) and clockwise (90° to 0° rotation) movements rely solely on the availability of the main energy source (pneumatic pressure from main air supply line). With the loss its primary energy source, double-acting actuator becomes inert.

2.1.2 Fail-Safe

Fail-safe actuators retain a secondary source of energy independent from the primary energy source. When there is a loss of primary energy source, the actuator's secondary energy source would be able to independently drive the actuator to a specified fail-position. Backup energy source can be in the form a reservoir that stores a secondary source of pneumatic pressure, or in the form of spring return actuator.

Chapter 3 "Introduction to Fail-Safe Mechanisms" will explore the different back up energy source in detail.

2.1.2.1 Fail-Open and Fail-Close

The specified fail-position can be in either fail-open (90° position) or fail-close (0° position). A typical valve would be in its full close position at 0°, this prevents flow downstream from the valve. Valve would be in its full open position at 90°, this allows flow downstream from the valve.

Chapter 3: Introduction to Fail-Safe Mechanisms

3.1 Fail-Safe Mechanism Overview

As detailed in Chapter 2 "Functions of Pneumatic Actuators", fail-safe actuators have a secondary source of energy to move the actuator to a specified fail-position when the main energy source (pneumatic pressure) is lost. Secondary energy source for pneumatic actuators comes in the form of an air reservoir (also known as reservoir-return actuator) or springs (also known as spring-return actuators).

3.1.1 Air Reservoir

Air reservoir used as a fail-safe mechanism is a pressure vessel that maintains its independence from the main air supply line. When there is a disruption to the main air supply line (actuator's main energy source), a trip valve is triggered to release stored pneumatic pressure from the air reservoir to the actuator. Refer to figure 3.1 for illustration.

(Figure 3.1)

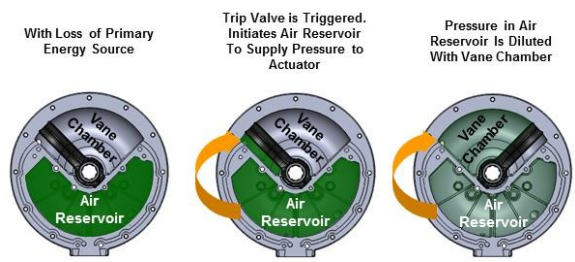

Air reservoir could be charged through another air supply line, but typically receives its pneumatic pressure through the same main air supply line. In such case, a one-way check valve maintains the independence of the air reservoir from the main air supply line. The one-way check valve prevents pneumatic pressure in the air reservoir from flowing back to the main airline, and only allows the main air supply pressure into the air reservoir if the main air supply pressure is greater than the reservoir.

The amount of fail-safe torque available at the end-of-stroke when relying solely on air reservoir (reservoir-to-close or reservoir-to-open) is calculated using Boyle's law, expressed as:

$$P_1V_1=P_2V_2$$

P_1 = Pressure in air reservoir
V_1 = Volume in air reservoir
P_2 = Pressure in actuator and air reservoir
V_2 = Volume in actuator and air reservoir

In other words, P_1 = the main air supply line pressure (because air reservoir is fed by main air supply line through one-way check valve), and P_2 = the pressure available to the actuator after the air reservoir fully dilutes its pressure with the actuator. The percentage drop from P_1 to P_2 is also the same percentage drop of torque that an actuator would have with and without the fail-safe mechanism fully utilized. Referring back to "1.2.1.1 Vane Style Actuator" torque calculation:

Applied force (pneumatic pressure) -
P_2 / P_1 percentage drop
x
Effective leverage distance ("X") -
constant
x
Effective surface area ("Area B and C") -
constant

<u>(Note: Pressure drop is the only changing variable)</u>

Using figure 3.2 as an illustrative example we can solve for the amount of torque degradation.

(Figure 3.2)

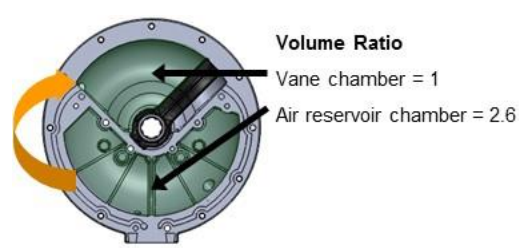

Assuming the main air supply line is at 5.5 bar (~80 PSI), the actuator is designed to produce 100 NM (885 in-lb) double-acting torque (without fail-safe mechanism), fail-safe torque available at the end-of-stroke with air reservoirs is:

p1 = Pressure in reservoir 5.5 bar
v1 = Volume in reservoir 2.6
p2 = Pressure in vane + reservoir X
v2 = Volume in vane + reservoir 1 + 2.6 = 3.6
Absolute atmospheric pressure 1 bar

$P_1V_1=P_2V_2$
$P_2 = P_1 V_1/ V_2$
$P_2+1 = (P_1+1)* V_1/ V_2$
+1 bar for atmospheric pressure
$P_2 = (P_1+1)* V_1/ V_2 – 1$
$P_2 = (5.5+1)*2.6/3.6 – 1$
P_2 = 3.69 bar (~53.5 PSI)
P_2 / P_1 = 67%

In other words, where 5.5 bar (~80 PSI) of pneumatic pressure (P_1) was originally available to the actuator, there will be 3.69 bar (~53.5 PSI) available to the actuator (P_2) after the air reservoir is fully diluted with the vane chamber. P_2 is 67% of P_1, so the new torque is 67% of the double-acting torque.

67% x 100NM = 67NM (593 in-lb)

Given that vane actuators are affected by supply pressure in a linear matter, an equal percentage drop in supply pressure drops the torque by the equal percentage. Figure 3.3 charts the torque decay with air reservoir as the fail-safe mechanism. Note the torque decay happens only when the trip valve is triggered by a disruption in main air supply pressure. Otherwise, the actuator torque curve would be the double-acting torque curve through full travel as illustrated on the EVA – Open / EVA – Close (full air supply) torque curve.

(Figure 3.3)

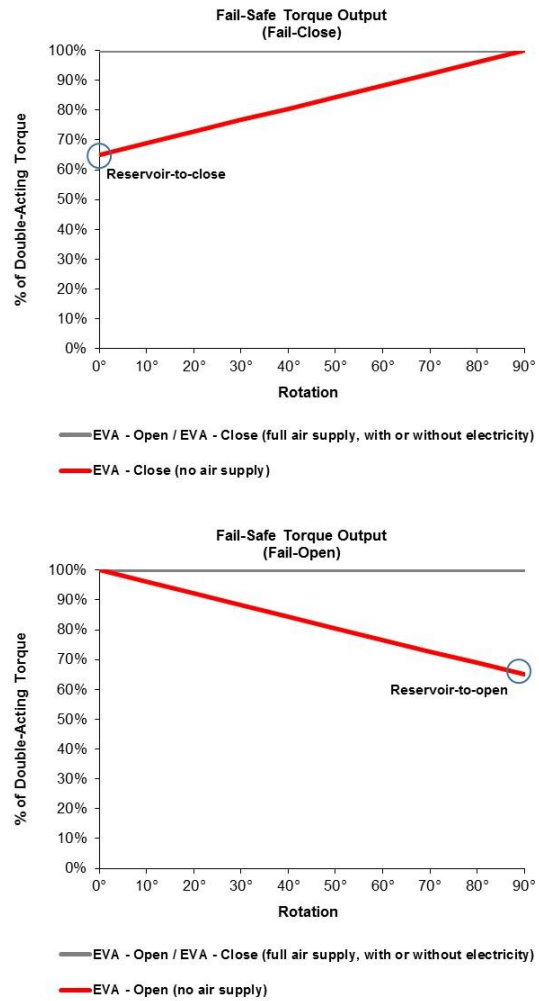

3.1.2 Springs

Spring loaded actuators use springs as the fail-safe mechanism. The stored energy in the springs drive the actuator to its fail-position. Refer to figure 3.4 for a top view of a rack & pinion actuator with springs.

(Figure 3.4)

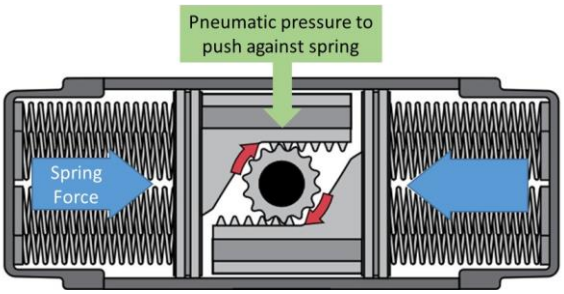

(Figure 3.5)

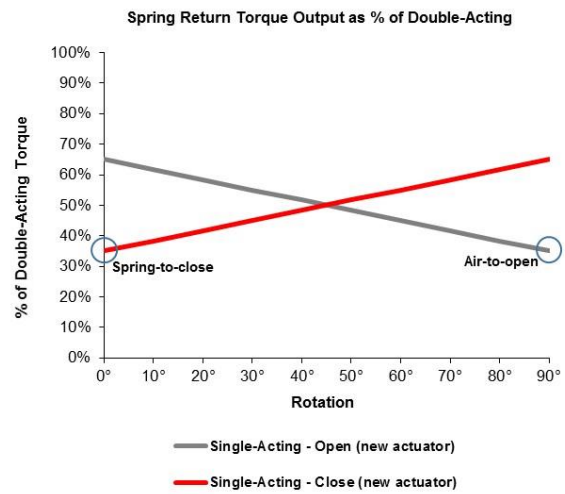

In such setups, the torque generated by the actuator has to overcome the resistance of the spring. Putting too many springs without enough pneumatic pressure to the actuator will result in an actuator unable to overcome the resistance from the springs. Putting too few springs may result in an actuator without sufficient fail-safe torque. As such, actuator manufacturers that use spring fail-safe mechanisms carefully pre-size the amount of springs given a predetermined pneumatic pressure.

Figure 3.5 shows the torque chart of a spring-return rack & pinion. The spring-to-close line is the torque the spring is capable of generating independently when pneumatic pressure is lost. As the actuator gets closer to full open (90°), the springs become more compressed and is capable of generating more torque. The air-to-open line is the net torque the actuator has with pneumatic pressure after overcoming the torque of the spring. As the actuator gets closer to full open (90°), more of the actuator's available torque is canceled out by the spring torque. Typically, in a perfectly calibrated spring-return actuator, end-of-stroke spring-to-close and end-of-stroke air-to-open are usually ~35% of what the actuator would be able to produce without fail-safe mechanisms installed. In other words, where the double-acting actuator is capable of producing 100% torque (i.e. 100 NM or 885 in-lb) when in double-acting, spring-return actuators can only produce ~35% (i.e. 35 NM or 310 in-lb) of the double-acting torque.

3.2 Summary

Refer to figure 3.6 for a summary of the two fail-safe mechanisms. Understanding the basics of the various designs help equip the engineer to solve the issue on hand.

(Figure 3.6)

Fail-Safe Mechanism Overview

	Air Reservoir	Spring
Fail-safe efficiency as % of double-acting torque	60%+	30-35%
Performance degradation	No	Possibility
Sizing flexibility	Standard	Case-by-case
Spring drift	No	Possibility

***Fail-safe efficiency as % of double-acting torque*:**

Refer to figure 3.7 for a side-by-side torque chart of the same actuator installed with the two different fail-safe mechanisms. Fail-safe efficiency represents how much torque the actuator is capable of producing at either the full open or full close position (0° and 90°). Efficiency is represented as a percentage of how much torque the actuator is capable of producing with and without the fail-safe mechanism installed. As seen in the graph, air reservoirs are more efficient by almost a multiple of 2x (65% as opposed to 35%), this is understandable because air reservoirs do not need to counteract a tertiary spring force that spring-return actuators require.

(Figure 3.7)

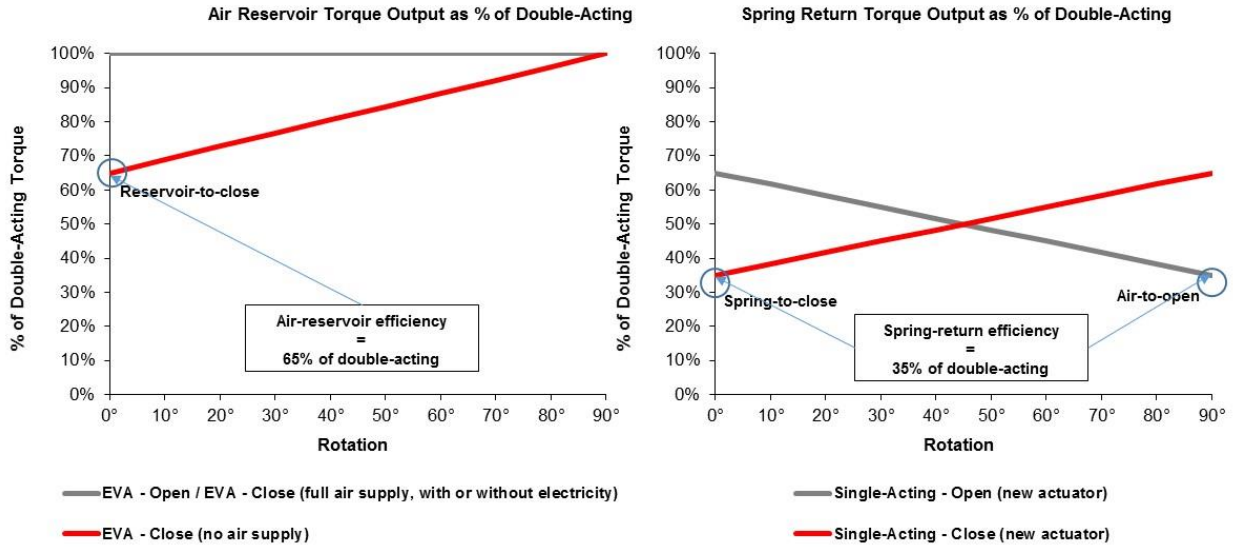

In practical terms, the efficiency of the fail-safe mechanisms correlates to the size, weight, air consumption, and stroke speed of the actuator. The less efficient an actuator is at generating fail-safe torque, the larger the actuator needs to be made. This is why air-reservoirs have traditionally been used in compact locations or with high fail-safe torque requirements.

Case Study: Skid Manufacturing, Compact Size and Weight Requirements

Market Discussion: Challenges associated with valve actuation on trucks

***Performance degradation*:**

In considering which fail-safe mechanism to use, it is important to understand the torque chart of the actuator after extended usage. Degradation of the fail-safe torque could result in incompliance with the intended torque requirement specification.

Generally speaking, it is easier for air reservoirs to maintain zero degradation of its fail-safe torque. Referring back to section "3.1.1 Air Reservoir", air reservoir fail-safe torque calculation is based on Boyle's Law, or $P_1V_1=P_2V_2$, where the fixed variables are the volume of the reservoir to the volume of the actuator and the reservoir. Unless the physical volume is altered, the fail-safe torque will remain the same. Refer to figure 3.8

(Figure 3.8)

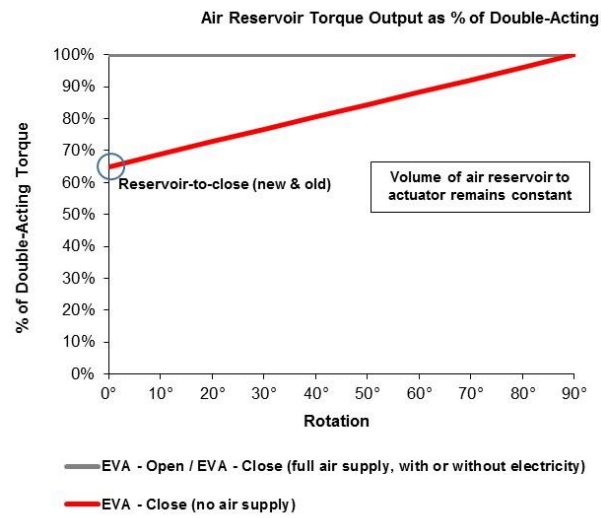

Generally speaking, spring-return fail-safe torque is unknown after extended usage. Referring back to section "3.1.2 Springs", spring-return fail-safe torque is based on the integrity of the spring. If the physical integrity of the spring is compromised, the fail-safe torque chart will change, refer to figure 3.9

(Figure 3.9)

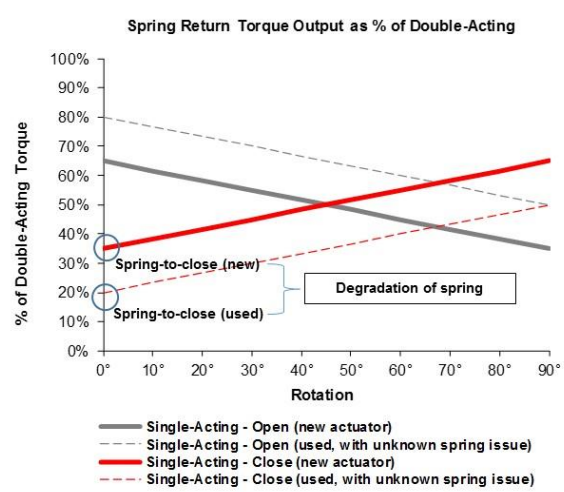

Degradation of springs are usually a result of spring fatigue or corrosion of the springs as a result of poor instrument air or poor environment. Refer to figure 3.10 for an example of corroded springs in a rack & pinion actuator.

(Figure 3.10)

Of the three causes of spring degradation, controlling for the quality of instrument air is the only variable that process facilities can do to ensure the integrity of the spring. Spring fatigue and poor environment are largely unavoidable. Spring fatigue comes naturally from regular usage. Poor environment leading to corrosion happens when actuators are installed in environments that are corrosive, wet, or dirty. The environment inevitably enters the actuator, refer to figure 3.11. As the spring moves the actuator, the actuator creates a vacuum and will draw in the environment unless special precautions are made.

(Figure 3.11)

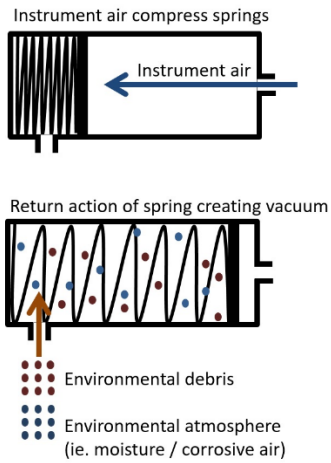

Case Study: Mining Industry, Poor Instrument and Poor Environment Air

Market Discussion: Steel mill part 1

Market Discussion: Steel mill part 2

Market Discussion: Wet or dirty environment, actuators being attacked from the outside-in.

***Sizing flexibility*:**

Generally speaking, spring-return actuators are pre-sized in 10 PSI increments, air-reservoir fail-safe actuators actively adapt to any given pneumatic pressure.

Actuator manufacturers that use spring fail-safe mechanisms carefully pre-size the amount of springs given a predetermined pneumatic pressure. Placing too many springs with not enough pneumatic pressure available will result in an actuator unable to overcome the resistance from the springs. Putting too few springs may result in an actuator not having enough end-of-stroke fail-safe torque.

On the other hand, referring back "3.1.1 Air Reservoir" air reservoirs utilize Boyle's Law to determine the fail-safe end of stroke torque. The end-of-stroke fail-safe torque is determined by the amount of air pressure left in the actuator (P_2) after the reservoir is fully diluted with the vane. This is expressed as

$P_2=(P_1V_1)/ V_2$

Given that V_1 and V_2 are held constant, and P_1 is fed by the main air supply pressure (while maintaining its independence through a one-way check valve), P_2 will always adapt to the main air supply's max available pressure.

Market Discussion: Inventory simplification & ease of use with reservoir-return design.

***Spring drift*:**

In considering which fail-safe mechanism to use, it is important to realize that process facilities may sometimes have inconsistent air supply pressure. Such inconsistent air supply pressure may affect the performance of actuators.

Spring actuators would be prone to spring-drift. This is the situation in which the main air supply pressure droops and spring-return actuators lose the pneumatic pressure necessary to overcome the resistance of the spring. The actuator may only partially open, or not operate at all.

On the other hand, air reservoirs rely on a trip valve to trigger the release of stored pneumatic pressure to the actuator. Trip valves can be set to trigger at various pressure values, such that the trip valve will not be triggered unless the main air supply drops below the predetermined BAR or PSI value. Therefore, as long as the inconsistent air supply stays above the pre-determined value, the actuator will continue to operate normally.

Chapter 4: Valve Automation – Sizing Actuator to Valve

4.1 Valve-to-Actuator Torque Sizing Principle

Valve-to-Actuator Sizing Check List
(1) Valve torque + safety factor
(2) Function of actuator required (DA or FS)
(3) Available pneumatic pressure
(4) Temperature

The fundamental purpose of a rotary actuator is to provide (1) enough torque for a rotary valve throughout the entire 0° through 90° rotation given (2) the function of the actuator specified with the (3) available pneumatic pressure. As long as the actuator is able to produce more torque than required throughout the entire rotation of the valve, the actuator will comply with specification.

(1) The required torque throughout the entire rotation is comprised of:

Valve's torque
+
Safety factor

Safety factory is usually expressed as a percentage in addition to the published valve torque requirement.

(2) The function of the actuator is either:

Double-acting
OR
Fail-safe

Double-acting or fail-safe specification would produce different actuator torque output.

(3) Available pneumatic pressure will be provided for the engineer to calculate how much torque the actuator can produce given the function required.

(4) Actuators contain soft materials that are rated for pre-determined temperature range. For example, the vane material that Easytork uses is Modified Neoprene with a temperature rating of -40C to 120C (-40F to 248F). If the medium flowing through the valve is very high (steam service), it is recommended to raise the gap distance between the actuator and the valve to dissipate the heat to the actuator. As a rule of thumb, a one inch gap between will dissipate 100F°. If the ambient temperature exceeds the rated temperature, special precautions would be required.

See figure 4.1 for an illustrative reference of a valve torque curve and safety factor. Different valve types have different torque curve. E.g., a butterfly valve requires the most torque to break away or into the seat (close 0°) and requires less torque in the middle of the rotation. In order to simplify torque requirement on valves, valve manufacturers usually provide the maximum torque required by the valve as a catch-all. As long as the actuator's minimum torque exceeds the maximum torque required by the valve with safety factor at all points of rotation, the actuator will be in compliance.

(Figure 4.1)

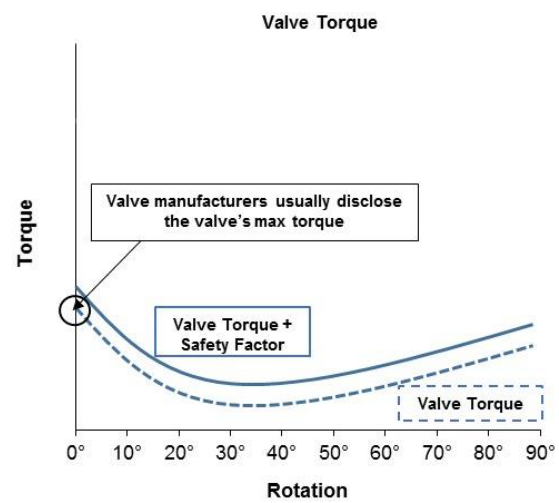

Figure 4.2 overlays a vane actuator's double-acting torque curve on top of the valve torque curve. The graph on the left shows an actuator in compliance with the valve specification, and the graph on the right is not in compliance because the actuator torque does not exceed the torque requirement.

(Figure 4.2)

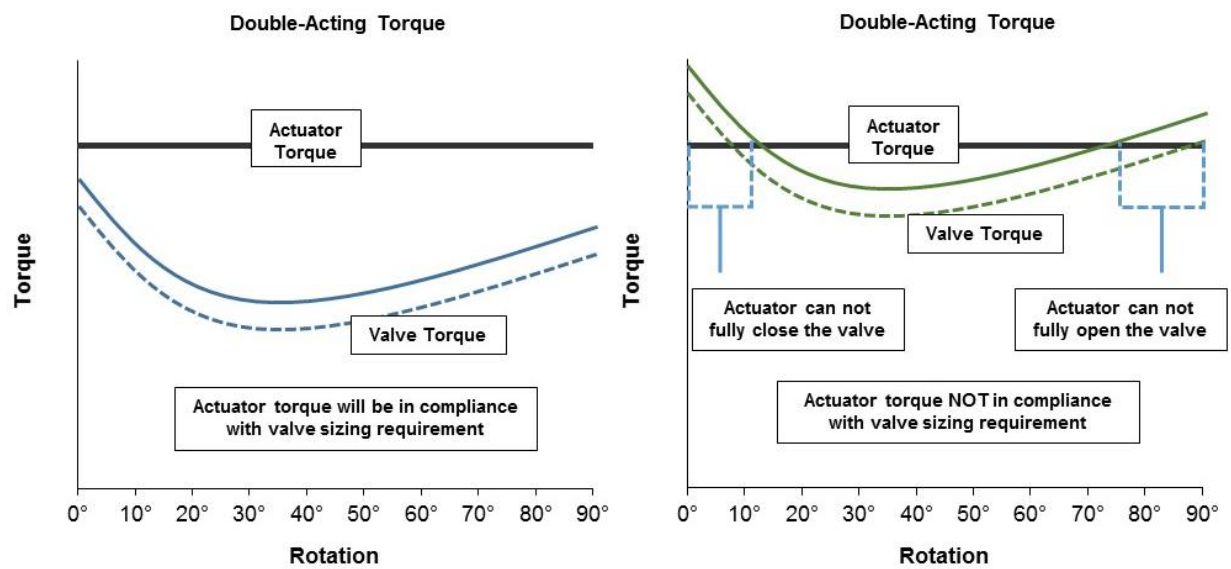

Figure 4.3 overlays an actuator's fail-safe torque curve utilizing air reservoir fail-safe mechanism and separately a spring fail-safe mechanisms on top of the valve torque curve, on the left and right respectively. Given the same actuator, a more efficient fail-safe system can cover a larger valve (illustrated as Valve 2).

(Figure 4.3)

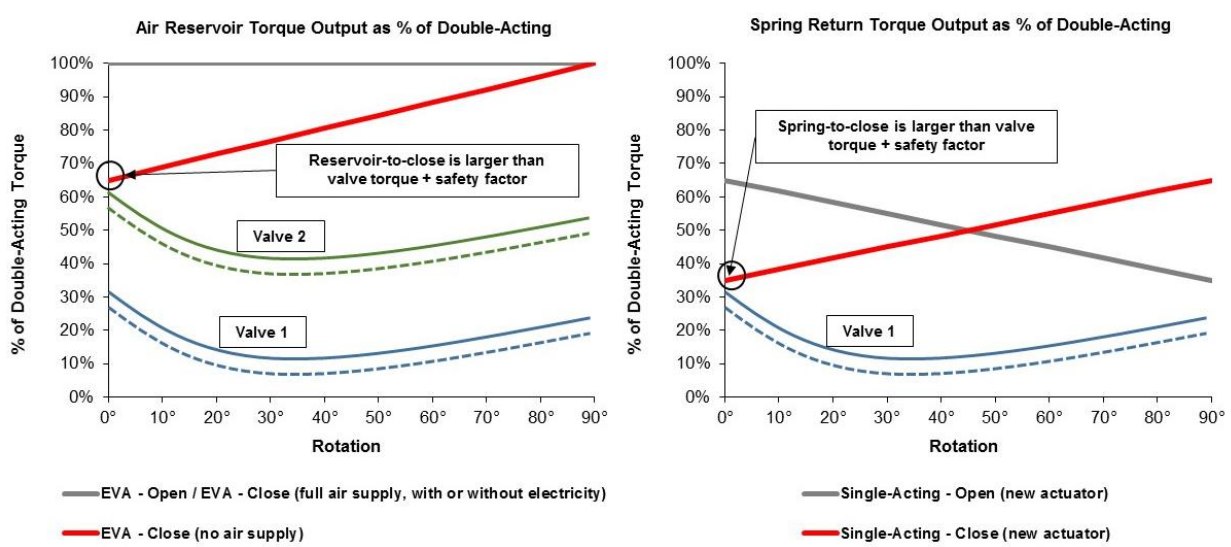

4.2 Double-Acting Torque Chart

Actuator manufacturers publish their actuator torque value in Metric (NM) and Imperial (in-lb) denomination. Referring to figure 4.4 for double-acting torque chart and graph. Using Easytork model EVA-0514 vane actuator as an example, the actuator torque is 632 in-lb at 80 PSI pneumatic pressure. If the valve's max torque requirement with safety factor is equal to or less than 632 in-lb, the EVA-0514 would be in compliance with the valve.

(Figure 4.4)

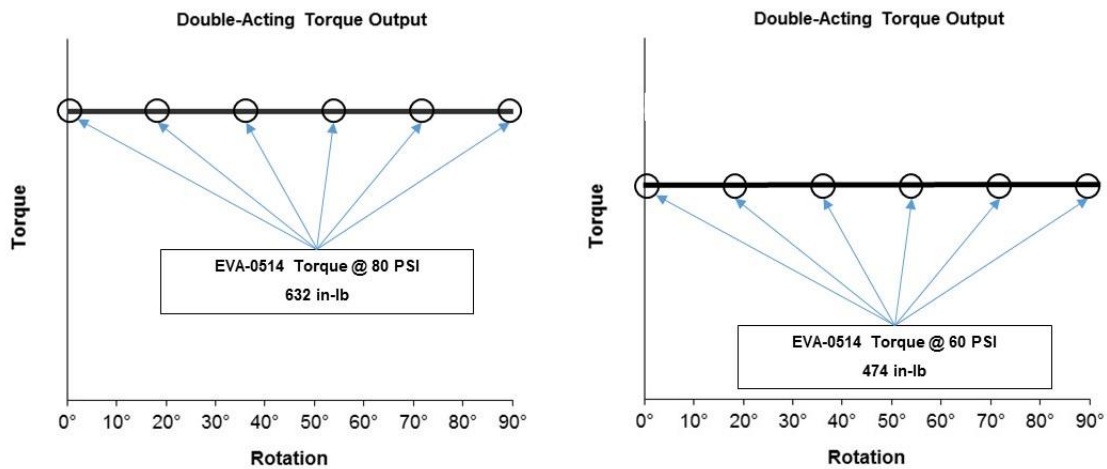

Double-Acting (In-Lb)								
Model / PSI	**30**	**40**	**50**	**60**	**70**	**80**	**90**	**100**
EVA-0411	129	171	214	257	300	343	386	429
EVA-0514	237	316	395	474	553	632	711	790
EVA-0717	505	673	842	1,010	1,178	1,347	1,515	1,683
EVA-1022	1,020	1,361	1,701	2,041	2,381	2,721	3,061	3,401
EVA-1227	2,263	3,018	3,772	4,527	5,281	6,036	6,790	7,545
EVA-1436	3,949	5,265	6,582	7,898	9,215	10,531	11,847	13,164
EVA-1646	8,678	11,571	14,463	17,356	20,249	23,141	26,034	28,927
EVA-1646 Tandem	17,356	23,141	28,927	34,712	40,498	46,283	52,068	57,854

Source: Easytork Automation Corp

4.3 Fail-Safe Torque Chart

This handbook covers only the torque chart for air reservoir fail-safe mechanism.

When actuator manufacturers publish their fail-safe torque chart with an air reservoir, the listed torque value is the end-of-stroke torque an actuator can produces when relying solely on the air-reservoir. Therefore, as long as the valve's max torque + safety factor is still less than the actuator's fail-safe torque, the actuator is in compliance with the valve. Note that fail-close (reservoir-to-close) and fail-open (reservoir-to-open) have the same fail-safe torque value, refer to figure 3.3.

Referring to figure 4.5 for fail-safe torque chart and graph. Using Easytork's EVA-0514 series as an example, the actuator's fail-safe torque is 412 in-lb when the actuator is sized for 80 PSI pneumatic pressure. If the valve's max torque requirement with safety factor is equal to or less than 412 in-lb, the EVA-0514 would be in compliance with the valve.

(Figure 4.5)

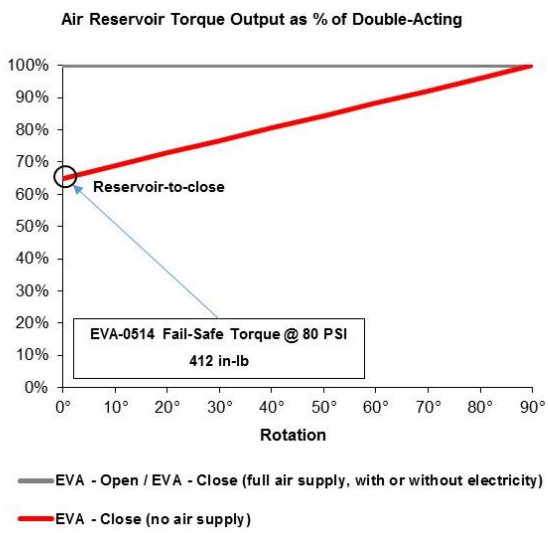

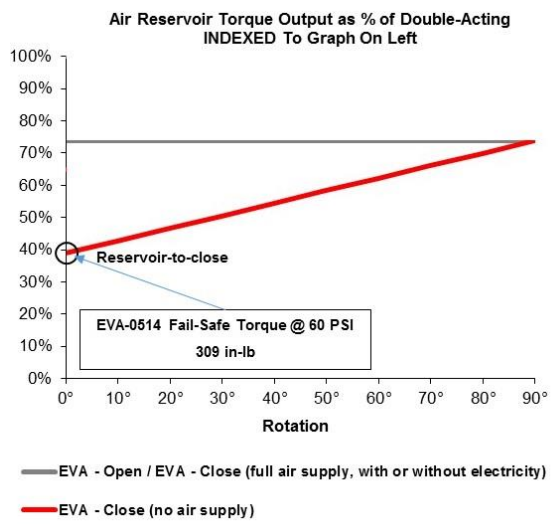

Fail-Safe (Minimum Torque At End-Of-Stroke) (In-Lb)

Model / PSI	30	40	50	60	70	80	90	100
EVA-0411	82	110	137	165	192	219	247	274
EVA-0514	154	206	257	309	360	412	463	514
EVA-0717	336	448	560	672	783	895	1,007	1,119
EVA-1022	675	900	1,126	1,351	1,576	1,801	2,026	2,251
EVA-1227	1,529	2,038	2,548	3,057	3,567	4,076	4,586	5,095
EVA-1436	2,666	3,554	4,443	5,331	6,220	7,108	7,997	8,886
EVA-1646	5,814	7,752	9,690	11,627	13,565	15,503	17,441	19,379
EVA-1646 Tandem	11,627	15,503	19,379	23,255	27,131	31,007	34,882	38,758

Source: Easytork Automation Corp

4.4 Easytork Sizing Worksheet

This section pertains to sizing valves with appropriate Easytork actuator model. Refer to figure 4.6 for a detailed actuator sizing check list.

(Figure 4.6)

Valve-to-Actuator Check List

Question	Steps
(1) Valve torque	Maximum torque required by valve + Safety factor
(2) Function of actuator requried	Double-acting or Fail-safe
(3) Available pneumatic pressure	If double-acting, refer to double-acting torque chart If fail-safe, refer to fail-safe torque chart Select actuator model with more torque than the maximum torque required by valve + safety factor
(4) Temperature	Check if temperature would fit within parameter of actuator

Example 1:

2" ball valve has a published torque of 350 in-lb, requires 20% safety factor. Available air supply is 80 PSI. Requirement for double-acting, normal ambient temperature

Valve-to-Actuator Check List

Question	Steps
(1) Valve torque	350in-lb x 1.2sf = 420in-lb
(2) Function of actuator requried	Double-acting
(3) Available pneumatic pressure	**EVA-0514** @ 80 psi = 632 in-lb
(4) Temperature	Room temperature, **EVA-0514 OK**

Example 2:

6" butterfly valve has a published torque of 905 in-lb, requires 20% safety factor. Available air supply is 80 PSI. Requirement for fail-safe, -20 F.

Valve-to-Actuator Check List

Question	Steps
(1) Valve torque	905in-lb x 1.2sf = 1086in-lb
(2) Function of actuator requried	Fail-safe
(3) Available pneumatic pressure	**EVA-1022** @ 60 psi = 1351 in-lb
(4) Temperature	-20F, **EVA-1022 OK**

Chapter 5: Valve Automation – Valve-to-Actuator Interface

5.1 Valve-to-Actuator Interface Overview

Chapter 5 details the practicality of conjoining two separate mechanical components (automating valve with actuator). Direct-mount is when the valve and the actuator can be conjoined together without the need of an intermediate support. Brackets and couplings are manifestations of such intermediate support. The incorporation of intermediate support has added implications on cost, logistical complication, and degradation on performance and lifespan of the automated valve package through side-loading and deadband through motion transfer slop.

Easytork has a dedicated website detailing actuator pairing to various valve brands, models, and valve sizes: https://www.easytork.com/valve_pairing_guide.html

5.2 Direct-Mount Check List

Refer to figure 5.1 for the valve-to-actuator mounting check list. In order for an actuator to direct-mount to the valve, all check items have to be comply.

(Figure 5.1)

Valve-to-Actuator Check List		
Matching flange dimension?	Y/N	If all yes, then **direct-mount** If any no, then intermediate support required
Matching drive component dimension?	Y/N	
Is valve capable of direct-mount?	Y/N	
Can actuator absorb valve stem height?	Y/N	

Refer to figure 5.2 for illustrations of flange dimension and drive component dimension. A butterfly valve and a ball valve are placed for illustration purposes, but the concept can apply to any rotary valves including but not limited to segmented control valves, plug valves, high performance butterfly valve, triple offset butterfly valves, among others.

(Figure 5.2)

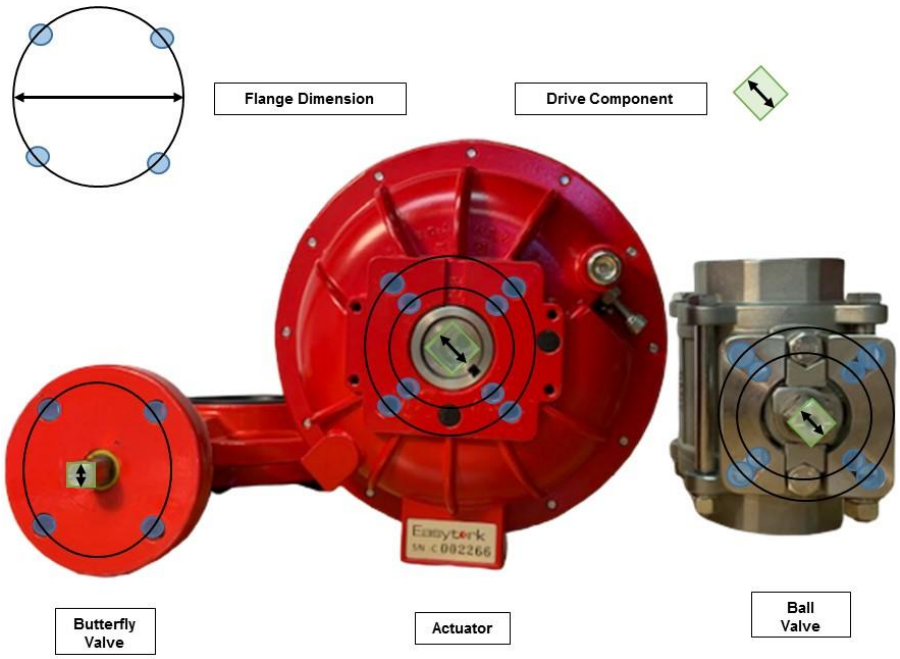

Refer to figure 5.3 for illustration of valves capable of direct-mount vs non direct-mount. Valve capable of direct-mount have a flat surface, while valves incapable of direct-mount do not (usually due to exposed packing gland on top of valve flange).

(Figure 5.3)

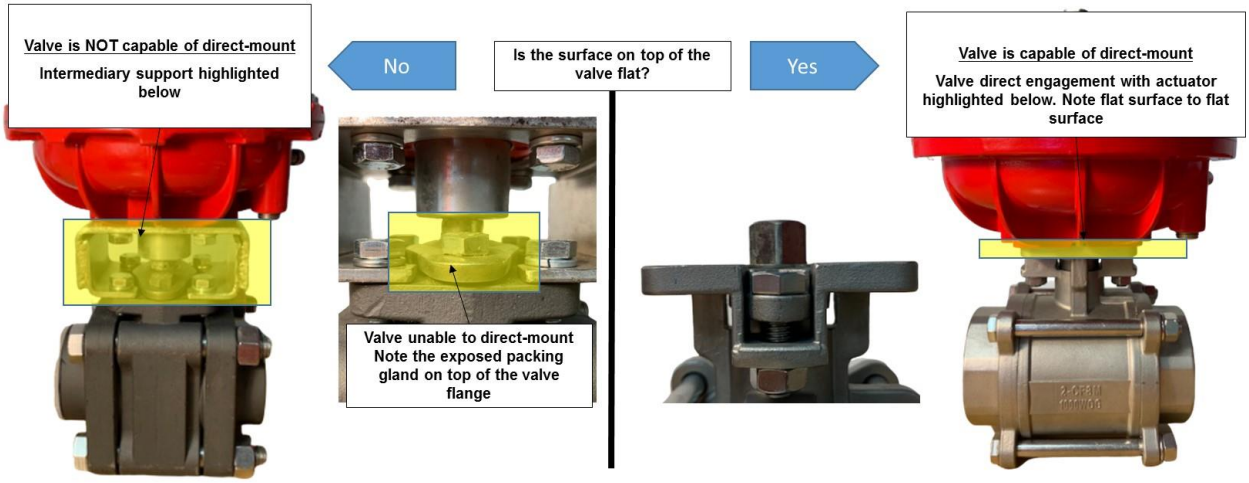

Refer to figure 5.4 for illustration of actuators ability of absorbing the valve stem's height. In order for direct-mount, the actuator has to be able to absorb the full height of the valve stem.

(Figure 5.4)

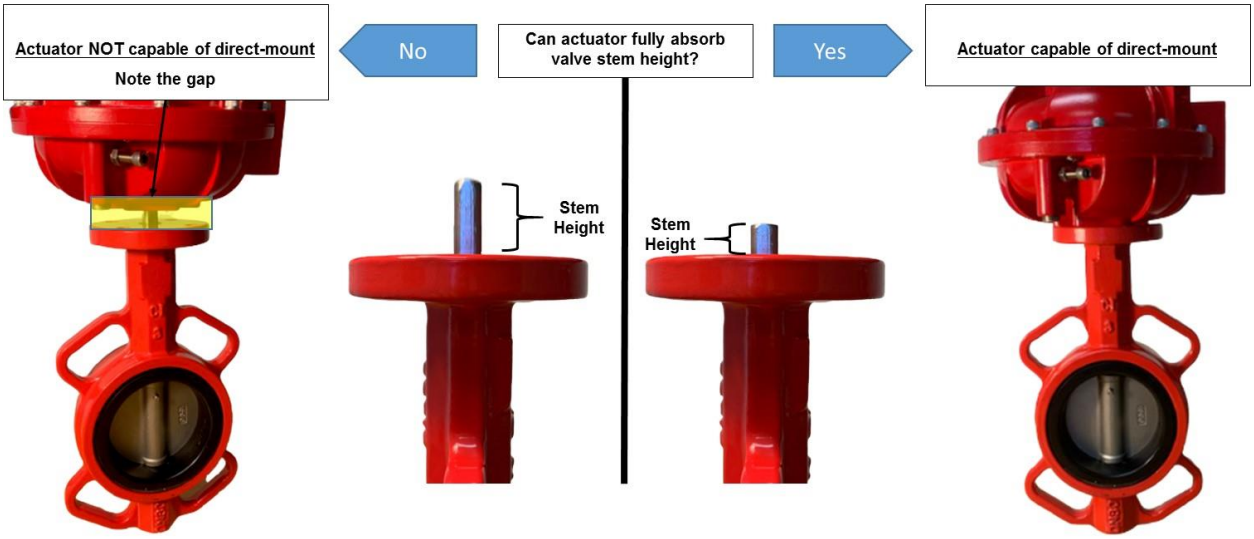

5.3 Valve-to-Actuator Interface Standards

ISO 5211 governs rotary actuators to industrial valves interface connection. ISO 5211 specifies the flange and driving component dimension required between actuator to valve, or actuator to intermediate support (bracket and coupling). Max torques allowed with given flange dimensions are given. Refer to figure 5.5 for ISO 5211 guidance for square drives.

(Figure 5.5)

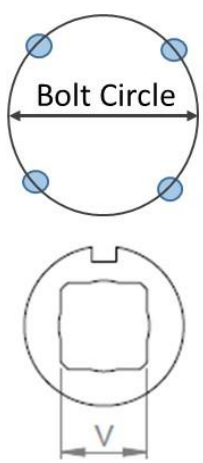

Flange Type	Bolt Circle		Max Flange Torque	V: Square Flats (Metric, in mm)										
	Metric	Imperial												
F03	36.0 mm	1.42 in	32 NM	9	-	-	-	-	-	-	-	-	-	-
F04	42.0 mm	1.65 in	63 NM	9	**11** [a]	-	-	-	-	-	-	-	-	-
F05	50.0 mm	1.97 in	125 NM	9	11	**14** [a]	-	-	-	-	-	-	-	-
F07	70.0 mm	2.76 in	250 NM	-	11	14	**17** [a]	-	-	-	-	-	-	-
F10	102.0 mm	4.02 in	500 NM	-	-	14	17	19	**22** [a]	-	-	-	-	-
F12	125.0 mm	4.92 in	1000 NM	-	-	-	17	19	22	**27** [a]	-	-	-	-
F14	140.0 mm	5.51 in	2000 NM	-	-	-	-	-	22	27	**36** [a]	-	-	-
F16	165.0 mm	6.50 in	4000 NM	-	-	-	-	-	-	27	36	**46** [a]	-	-
F25	254.0 mm	10.00 in	8000 NM	-	-	-	-	-	-	-	36	46	**55** [a]	-
F30	298.0 mm	11.73 in	16000 NM	-	-	-	-	-	-	-	-	46	55	**75** [a]

Note A: Indicates preferred dimension

However, with the multitude of valve types and brands, the reality is that valve interface do not line up cleanly to ISO 5211 specifications. Some common brands have non-ISO bolt circles, and even ISO compliant valve flanges have valve stem dimensions that are non ISO compliant. Refer to Figure 5.6 for a summary of actual valve interfaces in the market.

(Figure 5.6)

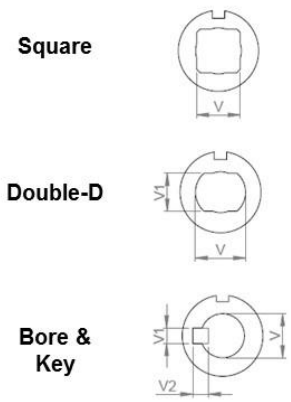

ISO Flange Type	Bolt Circle		Square (V) Double-D (V, V1) Bore & Key (V, V1, V2)
	Metric	Imperial	
F03	36.0 mm	1.42 in	Varied
F04	42.0 mm	1.65 in	Varied
F05	50.0 mm	1.97 in	Varied
F07	70.0 mm	2.76 in	Varied
	82.5 mm	3.25 in	Varied
F10	102.0 mm	4.02 in	Varied
F12	125.0 mm	4.92 in	Varied
	127.0 mm	5.00 in	Varied
F14	140.0 mm	5.51 in	Varied
F16	165.0 mm	6.50 in	Varied
F25	254.0 mm	10.00 in	Varied
F30	298.0 mm	11.73 in	Varied
	Non-Circular		Varied

Keeping in mind that matching flange and drive components between valve and actuator is a prerequisite for direct-mount, the problem with fragmented valve-to-actuator interface results in actuators from one brand not able to direct mount to valves of different brands. This has the effect of complicating process facilities logistics and locking process facilities to specific brands not because of proper stewardship (economic and product performance), but due to avoiding complications associated with non-direct-mount.

The fragmentation problem is felt most acutely by MRO work (maintenance, repair and operation), especially if the process facility carries more than one brand of valves and actuators. Given the time sensitive nature demanded of MRO work, the time and cost to make custom intermediate support to conjoin two different brands of valves and actuators are simply not the preferred option. As a result, process facility inventory of spare actuators and valves are artificially ballooned to accommodate quick retrofit for each brand.

Given the varied valve interfaces currently on the market and realizing the problems this poses to the process facility, actuator manufactures have begun incorporating both ISO standard and non ISO standard flange and variable drive component dimensions into their design. This has the operational benefit of direct-mounting across all valve brand platforms and reducing inventory logjam. Easytork is the market leader in this regard. Refer to figure 5.7 of Easytork's flange and driving component dimensions overlaid on the most common valve interfaces.

(Figure 5.7)

ISO Flange Type	Bolt Circle		Easytork						
	Metric	Imperial							
F03	36.0 mm	1.42 in	EVA 0309	EVA 0411					
F04	42.0 mm	1.65 in			EVA 0514				
F05	50.0 mm	1.97 in				EVA 0717			
F07	70.0 mm	2.76 in					EVA 1022		
	82.5 mm	3.25 in						EVA 1227	
F10	102.0 mm	4.02 in							EVA 1436
F12	125.0 mm	4.92 in							
	127.0 mm	5.00 in							
F16	165.0 mm	6.50 in							EVA 1646
F25	254.0 mm	10.00 in							

Available Easytork Drive Component (0309 - 1646)
Square, Double-D, Bore & Key
Varied

White Paper: Easytork Function and Mounting Flexibility

Market Discussion: Reduce inventory by having an actuator direct mount to a wide variety of valve brands

Easytork actuator pairing to various valve brands, models, and valve sizes

5.4 Easytork Mounting Worksheet

This section deals with the practicalities of mounting Easytork actuators onto valves. Figure 5.8 expands the Valve-to-Actuator Checklist as detailed in "5.2 Direct-Mount Check List" as it pertains to Easytork actuators.

(Figure 5.8)

Valve-to-Actuator Check List

Question	Easytork Limitation	
1. Is valve capable of direct-mount?	Refer to valve manufacturer, outside of Easytork control	If all yes, then direct-mount
2. Matching flange dimension?	**Q1:** Does actuator flange match valve flange?	
3. Matching drive component dimension?	**Q2:** Is Easytork drive component wide enough for valve stem?	If any no, then intermediate support required
4. Can actuator absorb valve stem height?	**Q3:** Can Easytork absorb valve stem height?	

Step 1:

Determine if the valve is capable of direct mount, refer to figure 5.3 for illustration. Valves that are capable of direct mount have a flat flange surface.

Step 2:

Refer to valve manufacturer for valve's flange pattern, figure Q1 lists the available flanges on Easytork

(Figure Q1)

Q1: Does actuator flange match valve flange?

ISO Flange Type	Bolt Circle Metric	Bolt Circle Imperial	Easytork Model						
F03	36.0 mm	1.42 in	EVA 0309	EVA 0411					
F04	42.0 mm	1.65 in			EVA 0514				
F05	50.0 mm	1.97 in				EVA 0717			
F07	70.0 mm	2.76 in					EVA 1022		
	82.5 mm	3.25 in							
F10	102.0 mm	4.02 in						EVA 1227	
F12	125.0 mm	4.92 in							EVA 1436
	127.0 mm	5.00 in							
F16	165.0 mm	6.50 in							EVA 1646
F25	254.0 mm	10.00 in							

Valve

Step 3:

Refer to valve manufacturer for valve stem dimensions. Easytork can make drive components for different shapes (square, double-d, or bore & key) but only up to a certain size. Figure Q2 specifies this size limitation as the maximum I.D. allowed in Easytork's variable drive component. If the valve stem O.D. is too large for Easytork, then it is recommended to size up an actuator size, or use an intermediate support.

(Figure Q2)

Q2: Is Easytork drive component wide enough for valve stem?

	Easytork Actuator								Actuator Allowable I.D.	Valve
	MAX.XØ: Easytork Drive Component Max Allowable Internal Diameter									Valve Stem O.D.
Model	**EVA 0309**	**EVA 0411**	**EVA 0514**	**EVA 0717**	**EVA 1022**	**EVA 1227**	**EVA 1436**	**EVA 1646**		
Metric (mm)	14.1 mm	18.1 mm	22.1 mm	28.1 mm	36.1 mm	52.0 mm	68.0 mm	78.0 mm		
Imperial (in)	0.56 in	0.71 in	0.87 in	1.11 in	1.42 in	2.05 in	2.68 in	3.07 in		

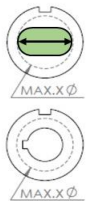

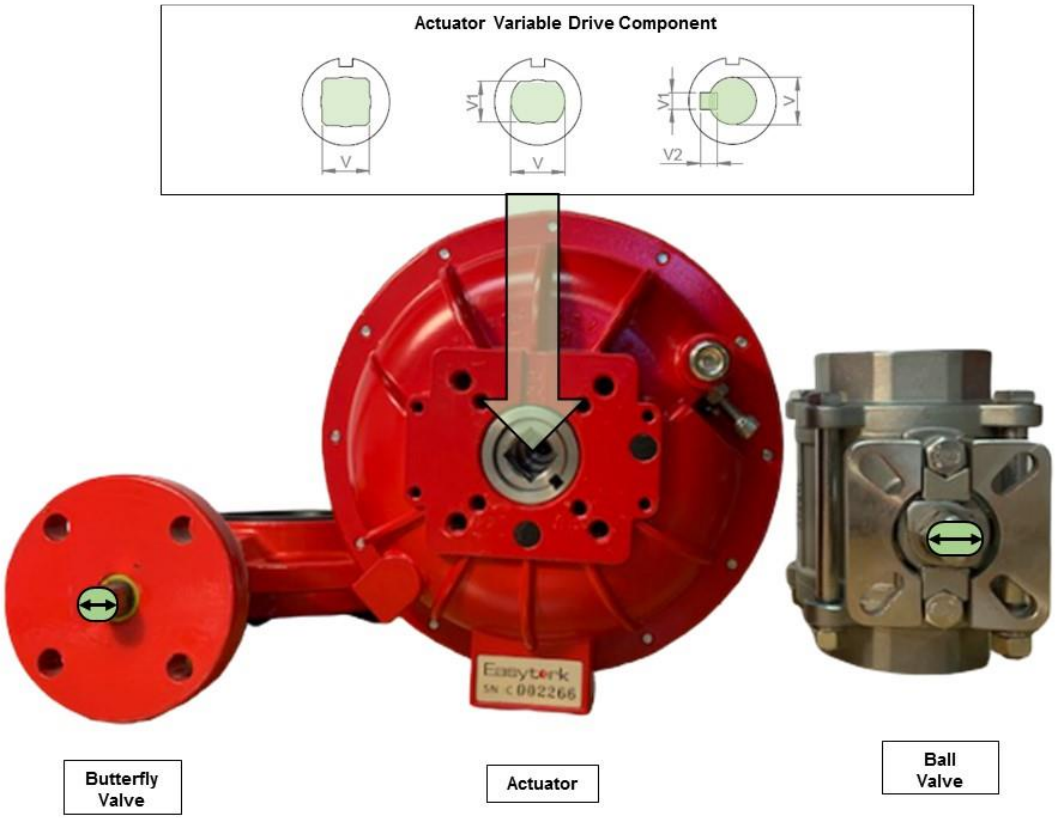

Step 4:

Refer to valve manufacturer for valve stem length and O.D. Figure Q3 lists the valve stem length absorbable given the valve stem O.D. Assuming the valve stem can fit into the actuator in the first place (refer to step 3), the valve stem can utilize the full depth of the actuator if the valve stem O.D. is small enough. Otherwise, the valve stem can utilize the shallower depth in the actuator. Quantitatively, if the valve stem O.D. is less than (X1), the valve can utilize the full depth of the actuator (Y4), if not it can utilize the shallower depth (Y3). In order for Easytork to direct-mount to the valve, the full height of the valve stem has to be absorbed by the actuator.

(Figure Q3)

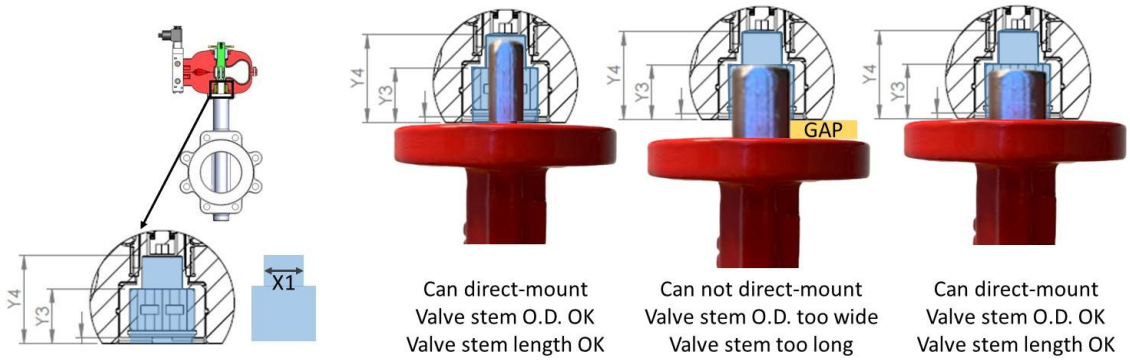

	Easytork Actuator							
	Absorbable Valve Stem Height							
Model	**EVA 0309**	**EVA 0411**	**EVA 0514**	**EVA 0717**	**EVA 1022**	**EVA 1227**	**EVA 1436**	**EVA 1646**
	(Metric, mm)							
Valve Stem O.D. Greater Than Or Less Than X1 Ø								
X1 Ø	10.5	13.0	16.0	21.0	28.7	35.5	43.0	57.5
If Valve Stem O.D. > X1 Ø, Valve Stem Length Absorbable								
Y3	13.3	18.0	21.3	26.6	32.0	40.8	52.0	67.0
If Valve Stem O.D. < X1 Ø, Valve Stem Length Absorbable								
Y4	20.8	26.5	34.3	42.6	52.5	77.8	89.0	109.0
	(Imperial, in)							
Valve Stem O.D. Greater Than Or Less Than X1 Ø								
X1 Ø	0.41	0.51	0.63	0.83	1.13	1.40	1.69	2.26
If Valve Stem O.D. > X1 Ø, Valve Stem Length Absorbable								
Y3	0.52	0.71	0.84	1.05	1.26	1.61	2.05	2.64
If Valve Stem O.D. < X1 Ø, Valve Stem Length Absorbable								
Y4	0.82	1.04	1.35	1.68	2.07	3.06	3.50	4.29

Chapter 6: Auxiliary-to-Actuator Interface

6.1 Actuator Ancillaries Attachment Standard

EN 15714 specifies the actuator design requirement for attachment of ancillaries such as limit switches, positioner, position transmitter, solenoid and/or manual operated valves, adjustable flow control devices, and safety devices.

6.2 Limit Switch & Positioners Interface Standard

Refer to figure 6.1 for drawing reference and figure 6.2 for the standards as specified by EN 15714 and how this pertains to Easytork.

(Figure 6.1)

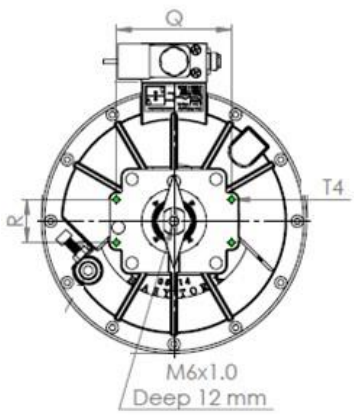

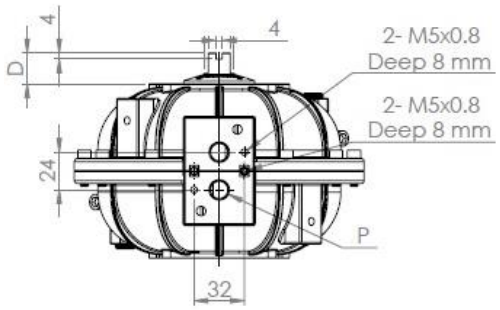

(Figure 6.2)

Top Work Ancillaries (Limit Switch / Positioner)

	Metric		
Size	**Q**	**R**	**D**
AA0	50 mm	25 mm	15 mm
AA1	80 mm	30 mm	20 mm
AA2	80 mm	30 mm	30 mm
AA3	130 mm	30 mm	30 mm
AA4	130 mm	30 mm	50 mm
AA5	200 mm	50 mm	80 mm

	Imperial		
Size	**Q**	**R**	**D**
AA0	1.97 in	0.98 in	0.59 in
AA1	3.15 in	1.18 in	0.79 in
AA2	3.15 in	1.18 in	1.18 in
AA3	5.12 in	1.18 in	1.18 in
AA4	5.12 in	1.18 in	1.97 in
AA5	7.87 in	1.97 in	3.15 in

Easytork Model	Size	
EVA-0309	AA0	
EVA-0411	AA1	
EVA-0514	AA1	
EVA-0717	AA1	
EVA-1022	AA2 Std.	AA1 Available
EVA-1227	AA3	
EVA-1436	AA3	
EVA-1646	AA3	

6.3 Actuator Pressure Connection (Solenoid or Pilot Valve) Interface Standard

Refer to figure 6.3 for drawing reference and figure 6.4 for the standards as specified by EN 15714 and VDI/VDE 3845 (NAMUR) and how it pertains to Easytork.

(Figure 6.3)

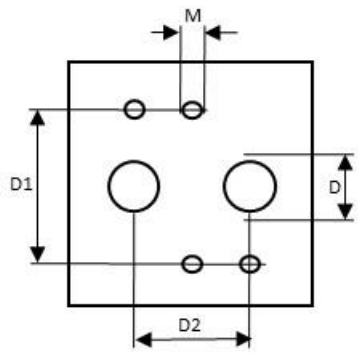

(Figure 6.4)

Top Work Ancillaries (Limit Switch / Positioner)

Type of pressure connection flange	Metric			
	D	D1	D2	M
G 1/8 or 1/8 NPT	1/8"	32 mm	24 mm	M5
G 1/4 or 1/4 NPT	1/4"	32 mm	24 mm	M5
G 3/8 or 3/8 NPT	3/8"	45 mm	40 mm	M6
G 1/2 or 1/2 NPT	1/2"	45 mm	40 mm	M6

Easytork Model	Type of pressure connection flange
EVA-0309	G 1/8 or 1/8 NPT
EVA-0411	G 1/4 or 1/4 NPT
EVA-0514	G 1/4 or 1/4 NPT
EVA-0717	G 1/4 or 1/4 NPT
EVA-1022	G 1/4 or 1/4 NPT
EVA-1227	G 1/4 or 1/4 NPT
EVA-1436	G 1/4 or 1/4 NPT
EVA-1646	G 1/4 or 1/4 NPT

Additional Resources

Case Studies

Mining Industry - Poor Instrument and Poor Environment Air

Skid Manufacturing - Compact Size and Weight Environment

Water Industry - Using Water Instead of Air for Energy Source

Market Discussion

An end-user's three-year review of Easytork

Part 1 – Size and weight

Part 2 – Wet and dirty environment

Part 3 – Inventory reduction

Part 4 – Responsiveness and accuracy for control valves

Part 5 – Summary after three years

Steel industry

Part 1 – Two year attrition rate of Easytork actuators

Part 2 – Visualization of the steel industry challenge

Transportation industry – Challenges and solutions

Distributor review of inventory reduction

White Papers

Function and Mounting Flexibility

Actuation Fugitive Emissions Reduction

Additional Resources

Various valve brand pairing to Easytork

Easytork features and benefits summary

Market Research and Analysis

Frost & Sullivan Research Report on Easytork

Pneumatic fail-safe actuator without the use of springs

Easytork Automation Corporation